JASAE
Journal of Applied Science and Advanced Engineering
Vol. 2 No. 2 (2024); p. 56 - 60

e-ISSN: 2985-7252
https://jasae.org/

The Use of MQ 3 Sensor in Measuring Benzo[a]Pyrene Compound From Wood Husk Combustion Process with Robotdyn Uno R3 WiFi

Alga Pradipta Ananda Putra[1], Arinto Yudi Ponco Wardoyo[2]*, Dewi Anggraeni[3], and Renetha Salma Myesha A[4]
[1,2,3,4] Brawijaya University, Indonesia
*email: a.wardoyo@ub.ac.id

ARTICLE HISTORY
Received: 1 August 2024
Revised: 19 September 2024
Accepted: 25 September 2024

KEYWORDS
Benzo[a]Pyrene,
MQ 3 Sensor,
Robotdyn Uno R3 WiFi,
Wood Husk

ABSTRACT– BaP (Benzo[a]pyrene) is one of the Polycyclic Aromatic Hydrocarbon (PAH) compounds produced from the combustion process of organic materials such as wood husks. This study aims to utilize the MQ 3 sensor integrated with RobotDyn Uno R3 WiFi microcontroller to measure BaP concentration in gas emissions from wood husk combustion. The MQ 3 sensor was chosen for its sensitivity to BaP compounds. In this experiment, the MQ-3 sensor achieved an accuracy of 85% with a BaP measurement range from 0 to 26 ppm. Measurements were conducted on wood husks with BaP concentrations varying from 0 to 4 ppm. The results indicate that this method is effective for real-time monitoring of BaP levels in wood husk combustion processes, with potential applications in controlling toxic gas emissions from such processes

© Putra et al.

This is an Open Access article distributed under the terms of the Creative Commons CC-BY-4.0 License, which permits unrestricted use, distribution, and reproduction in any medium, provided the original work is properly cited.

Introduction

Benzopyrene (BaP) is a polycyclic aromatic organic compound (PAH) with four carbon rings, as described by [1][2]. Chemically, BaP with the chemical formula C20H12 is hydrophobic and insoluble in water but can dissolve in non-polar solvents such as chloroform or dioxane[3]. The long-term health risks associated with exposure to BaP include potential genetic damage that can lead to cancer development, given its ability to produce reactive metabolites such as diol epoxides, which are known to bind to DNA and induce genetic mutations. Furthermore, long-term exposure to this compound can also lead to other diseases such as reproductive system decline, as it can suppress spermatogenesis in humans, and immune system suppression, as it can interfere with human metabolic processes [4][5].

Exposure to hazardous compounds in the environment, such as Benzo[a]pyrene (BaP), a polycyclic aromatic hydrocarbon (PAH), has become a global concern in efforts to protect human health and the environment [6]. BaP is a byproduct of various human activities, particularly fossil fuel combustion and industrial processes, and is scientifically proven to be carcinogenic[4]. Due to the serious health risks posed by BaP, it is crucial to have reliable and sensitive methods for detecting and monitoring its concentration in the air[7].

Gas sensors have become essential tools in air quality monitoring. One intriguing sensor to characterize in this context is the MQ-3 sensor[8]. The MQ-3 sensor, typically used for detecting alcohol, has the potential to be adapted for detecting other organic compounds, including BaP. However, before this sensor can be relied upon for BaP detection, a thorough characterization of its response to BaP concentrations in the air is necessary[9].

Because there is no sensor that can monitor the concentration of BaP compounds, this research was conducted. This study aims to develop a device to measure BaP concentrations from wood husk combustion processes using the MQ 3 sensor. The results of this research are expected to provide valuable insights into the development of device for monitoring air pollution related to PAHs, as well as to enhance understanding of the health risks associated with BaP exposure. Thus, effective preventive measures can be taken to protect the public from its negative effects.

Materials and Methods

A. Material

This study uses several tools and materials that can be grouped into two categories, hardware and software. The details of the hardware and software equipment used in supporting this research are as follows. The hardware used was wood husk, PCB (9 x 15.5 cm), DC Adapter 12V – 1A, DC female jack power socket, push button, on/off switch, brushless fan fan 12V, single pole-double throw (SPDT) relay module 5V and 1 channel, DC 12 V pump with 1 m/s speed, DC Adjustable StepDown XL 4005 Module, Kanomax Anemometer (model A031), 20 x 4 LCD with I2C Communication, RTC DS3231 3.3V DC, SD Card Module 5V DC, RobotDyn Uno R3 WiFi microcontroller, MQ 3 gas sensor module, Acrylic box with a size of 28 cm x 28 cm x 14 cm, and One-Way Pneumatic Valve 8mm. The software used

Easyeda, Arduino IDE, Microsoft Excel, Microsoft Word, Canva, Notepad, Draw.Io.

B. Measurement System Design

The block diagram of the test system shows in Figure 1 that the system is divided into three main parts: sensing element, processing element, and display. The MQ-3 sensor acts as the sensing element that converts BaP compound gases into electrical signals, with this sensor falling under the category of smart sensor level I, which already has a signal conditioning circuit.

The RobotDyn Uno microcontroller is responsible for processing the electrical signals into digital values through an ADC process. These digital values are then processed before being communicated to the next device. The system operates using a 12V DC power supply connected to the microcontroller's minimum circuit to activate its functions.

An Adjustable Stepdown XL 4005 module generates the 5V voltage required by other components. Data from the sensing element is sent to the signal processor using the I2C protocol, where it is processed to obtain precise measurement results. Subsequently, the microcontroller sends the measurement data to a 20 x 4 LCD via I2C communication and transfers data to an SD Card module via SPI for storage. Below is the instrumentation system design related to the measurement system.

After completing the process of designing the instrumentation system block diagram, the next step involves creating the circuit by assembling the necessary components. The arrangement of these components will form an instrumentation system based on the circuit schematic as follows.

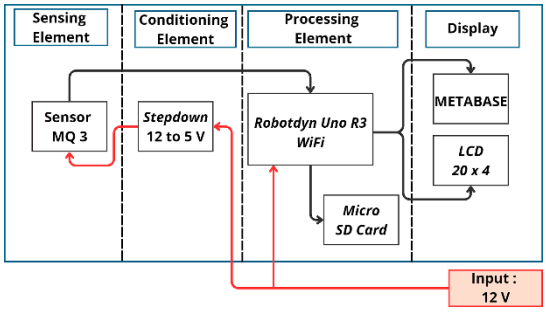

Figure 1. Instrumentation System Design

The circuit in this system utilizes a 12V input voltage from the power supply, controlled by a switch button to manage the ON/OFF state of the system. This voltage is routed to the Adjustable Stepdown XL 4005 module to generate the 5V required by other components, such as the MQ-3 sensor. Additionally, the 12V voltage is fed into the V_{in} pin of the microcontroller to reduce noise on the relay and LCD, utilizing the microcontroller's 5V V_{cc} voltage.

A fan and pump are employed to regulate airflow and suction of BaP gas to be measured. The 5V SPDT Relay Module acts as a switch controlling the pump's operation. The MQ-3 sensor, used to measure BaP gas concentration, operates within a working concentration range of 0-2000 ppm, a temperature range of -10°C to 50°C, and humidity below 95% RH.

Data of gas concentration measured by the MQ-3 sensor is processed by the microcontroller and displayed on a 20x4 LCD using a formula derived from the sensor's gas calibration equation in equation (1), (2), and (3).

C. Calibration Of The MQ-3 Sensor

Calibration scheme for MQ-3 sensor show in Figure 2. Before the calibration process begins, the sensor underwent a pre-heating process to warm up and stabilize its analog performance. The purpose is to ensure the sensor operates at maximum efficiency, as gas sensor materials are semiconductor-based and function optimally at higher temperatures. The minimum duration for the pre-heating process was two days, as specified in the sensor datasheet. Once the sensor completed the initial 2-day pre-heating and was to be used later, repeating the 2-day pre-heating process was unnecessary. However, a 30-minute heating of the sensing element should still be performed. Subsequently, the sensor that had undergone the pre-heating process could be calibrated with BaP compound using the method depicted in **Figure** 2.

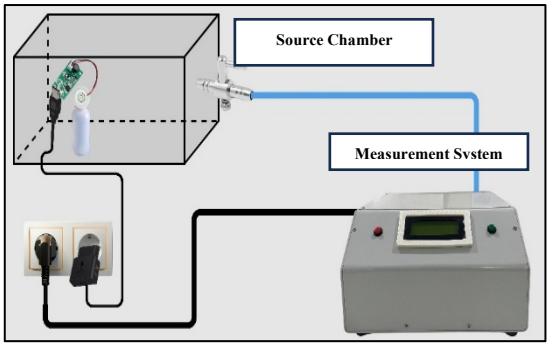

Figure 1. Calibration Scheme for MQ-3 Sensor

Calibration is comparing a measuring instrument with its standard to achieve traceable accuracy. In this study, the calibration is performed to check and adjust the accuracy of the MQ-3 sensor by comparing the data found in the sensor's datasheet (sensor ratio value comparison). The calibration process can be assisted by using the equation below.

$$\text{Rasio} = \frac{R_S}{R_0} \quad (1)$$

$$\text{R}_\text{S} = \left(\frac{V_C}{V_{RL}} - 1\right) \text{ x R}_\text{L} \quad (2)$$

$$\text{V}_\text{RL} = \left(\frac{\text{Analog read}}{\text{resolution}}\right) \text{x 5 Volt} \quad (3)$$

The calibration process begins by determining the value of R_0 (sensor resistance in ambient air under stable conditions based on the sensor datasheet). After obtaining the value of R_0, the next step is to determine the value of R_s. R_s represents the sensor resistance when exposed to a compound. The value

of R_s is determined by calculating the voltage generated by the sensor when exposed to the analyte used during calibration. In this calibration process, the analyte used is solid Benzo[a]pyrene (BaP) that has been dissolved, hence in liquid form. The following equation is used to determine the value of R_s when the sensor is exposed to the analyte. From this calibration process, it will be determined whether the sensor can be used for detection and measurement purposes.

D. Measuring BaP Concentration in Rise Husk Combustion

In this study, only one testing scheme was used to assess the system's capability to measure BaP concentration from rice husk combustion and its performance against the test samples. Measurements of BaP concentration from the rice husk combustion process were conducted by collecting data from ambient levels to steady state. This process was repeated three times.

The measurement scheme began with the collection of emissions from various sources into the test source chamber. Each test source chamber was dedicated to a single emission source. Once emissions were collected in the test source chamber, they were then transferred to the measurement chamber using an external pump operating at a speed of 1 m/s. After the emissions were accumulated in the measurement chamber, they were further directed into the measurement instrument system. Measurement data was displayed on an LCD screen and stored on an SD card. The measurement scheme for BaP concentration from rice husk combustion can be seen in **Figure** 3.

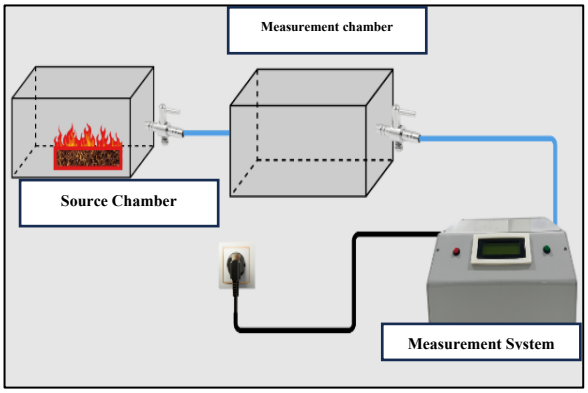

Figure 2. Measurement Scheme of BaP Concentration from Rice Husk Combustion.

Results and Discussion

A. Result of MQ-3 sensor calibration

Referring to subsection C, the calibration process of the MQ-3 sensor was conducted. The sensor calibration process involved pre-heating the sensor for 30 minutes to optimize its performance. After the pre-heating process, the next step was to determine the sensor resistance value in clean air (ambient Rs). This value will be used as a reference to establish the ratio value for BaP compounds. The data of resistance values in clean air, along with a graph showing the stability of these resistance values, are presented in **Table 2**.

Table 1 Data of Measured Values of Rs in clean air

Measurement of the Clean Air R_S value (Ω)	
Average	57.58
Standard deviation	5.90

Based on **Table** 1 above, measurements of the Rs in clean air were conducted over 714 seconds, resulting in 714 data points. From these data, the average value of Rs in clean air is calculated to be 57.58 Ω with a standard deviation of 5.9 Ω. After obtaining the value of Rs in clean air, the next step is to find the sensor's R_0 value. R_0 represents the sensor resistance when it is not exposed to any compounds. According to the MQ-3 sensor datasheet, the ratio of Rs to R_0 in clean air is 1. This means that Rs and R0 have the same value in clean air conditions. Therefore, in this case, we can conclude that the R_0 value of the sensor under clean air conditions is 57.58 Ω.

After obtaining the values of Rs and R_0 in clean air conditions, the next step is to proceed with the calibration process of the MQ-3 sensor using BaP compound. The result of this calibration process typically yields a sensor calibration graph. In this graph, the x-axis represents the measured concentrations in parts per million (ppm), and the y-axis represents the ratio value between Rs and R0. This calibration graph, as described, can be observed in **Figure 4** below.

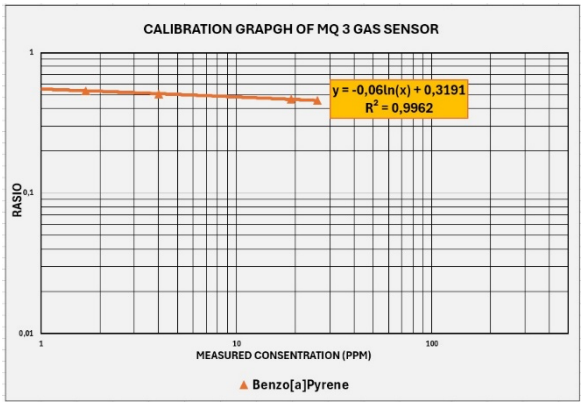

Figure 3. Calibration graph of MQ-3 sensor against BaP compound

Based on the calibration graph of the MQ-3 sensor with BaP gas, as shown in **Figure** 4, five concentration points were selected for calibration. These points correspond to BaP concentrations of 0 ppm, 2 ppm, 4 ppm, 19 ppm, and 26 ppm. The ratio results from the measurements of these five selected concentration points based on the calibration graph are as follows: for 0 ppm, the ratio is 0.38; for 2 ppm, the ratio is 0.28; for 4 ppm, the ratio is 0.23; for 19 ppm, the ratio is 0.15; and for 26 ppm, the ratio is 0.12.

After obtaining the calibration graph, a trendline was generated from the data of these five concentration points. The type of trendline used was logarithmic. The logarithmic type was chosen because, during the calibration process of the MQ-3 sensor at the factory, its sensor response is expressed in a logarithmic equation. Additionally, the logarithmic type was selected because the R-squared (R^2) value obtained was the highest and closest to one compared to other types of trendlines. The R^2 value obtained for the BaP calibration graph data is 0.99. From **Figure** 5, the calibration equation for the BaP compound was derived, which can be used to determine the measured concentration values in ppm. The calibration equation obtained is as follows:

$$y = -0{,}06\ln(x) + 0{,}3191 \quad (4)$$

Based on the calibration graph in **Figure** 5, where x represents the concentration in ppm and y represents the ratio when seeking the concentration value, the equation above changes to

$$\text{Rasio} = -0{,}06\ln(\text{C}) + 0{,}3191 \quad (5)$$

$$\ln(C) = \frac{\text{Rasio}-0{,}3191}{-0{,}0} \quad (6)$$

$$\text{C} = \exp^{\frac{\text{Rasio}-0{,}3191}{-0{,}06}} \quad (7)$$

The equation above will yield the measured concentration value in ppm of BaP compound. This equation will later be integrated into the microcontroller so that the system can display the concentration measurement results in ppm when measuring various emissions. These data will be compared with the calculated concentrations to assess the calibration data consistency. Below are the comparison data between the calculated

B. Concentration Results of BaP in Wood Rice Husk Combustion

Referring to subsection D, measurements were conducted on BaP concentration during the combustion of wood rice husks with a constant initial mass of 3 grams. This testing aimed to determine the range of BaP concentration measurements in wood rice husk combustion emissions that sensors can detect. The testing process was repeated three times to obtain accurate values for the BaP concentration range. The results of the combustion emissions of dried banana leaves are presented in **Figure** 5.

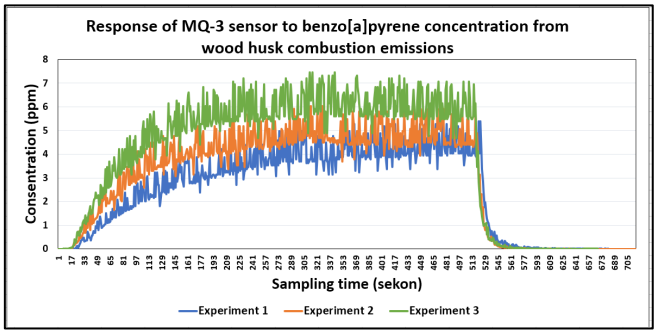

Figure 4. The measured BaP concentration of wood husk combustion

Based on **Figure** 5, emissions data from burning 0.62 g of wood husk results in a maximum concentration of 5 ppm and a minimum concentration of 0 ppm. Burning 0.63 g of wood husk produces a maximum concentration of 6 ppm and a minimum concentration of 0 ppm. Furthermore, burning 0.71 g of wood husk emits BaP with a maximum concentration of 7 ppm. From the data above, these emissions data are processed to obtain the total measured concentrations and their measurement deviations. Below is the measurement result from burning 0.62, 0.63, and 0.71 g of wood husk, as shown in **Table** 2.

Table 2. Measurement data of wood husk combustion emissions

Experiment	The mass of the burned sample (gr)	Total measured concentration (ppm)	Standard deviation	Average concentration (ppm)
1	0,62	1742	2	3
2	0,63	2103	2	3
3	0,71	2681	3	4

Based on **Table** 2, in the first iteration, burning 0.62 grams results in a total BaP compound concentration of 1742 ppm with a deviation of 2 ppm. In the second iteration, burning 0.63 grams produces a total BaP compound concentration of 2103 ppm with a deviation of 2 ppm. In the third iteration, burning 0.71 grams emits a total BaP compound concentration of 2681 ppm with no deviation (0 ppm). Therefore, it can be concluded that an increase in the burned sample mass leads to an increase in the concentration value of BaP compounds.

Conclusion

This study successfully measures the concentration of BaP using an MQ3 Sensor in wood rice husk combustion. The measured concentration of BaP emitted by wood rice husk combustion depends on the burned mass. The sensor has been successfully calibrated and can be used in measuring BaP. MQ-3 was also tested for use in detecting emissions from burning dried banana leaves.

References

[1] M. J. Landzberg *et al.*, "Timely PAH Identification in Adults With Repaired Congenital Heart Disease? The ACHD-QuERI Registry Insights," *JACC Adv.*, vol. 2, no. 9, 2023, doi: 10.1016/j.jacadv.2023.100649.

[2] E. Madeen *et al.*, "Toxicokinetics of benzo[a]pyrene in humans: Extensive metabolism as determined by UPLC-accelerator mass spectrometry following oral micro-dosing," *Toxicol. Appl. Pharmacol.*, vol. 364, pp. 97–105, 2019, doi: 10.1016/j.taap.2018.12.010.

[3] X. Lu, T. Luo, X. Li, Y. Wang, Y. Ma, and B. Wang, "Effects of combined remediation of pre-ozonation and

bioaugmentation on degradation of benzo[a]pyrene and microbial community structure in soils," *Environ. Sci. Pollut. Res.*, vol. 30, no. 19, pp. 55557–55568, 2023, doi: 10.1007/s11356-023-25980-z.

[4] K. Xu *et al.*, "Benzo(a)pyrene exposure in early life suppresses spermatogenesis in adult male zebrafish and association with the methylation of germ cell-specific genes," *Aquat. Toxicol.*, vol. 258, 2023, doi: https://doi.org/10.1016/j.aquatox.2023.106504.

[5] M. T. Zenzes, R. Bielecki, and T. E. Reed, "Detection of benzo(a)pyrene diol epoxide-DNA adducts in sperm of men exposed to cigarette smoke," vol. 72, no. 2, 1999.

[6] T. E. B. Ashino *et al.*, "Protective effects of piperlongumin in the prevention of inflammatory damage caused by pulmonary exposure to benzopyrene carcinogen," *Int. Immunopharmacol.*, vol. 101, p. 108285, 2021, [Online]. Available: https://doi.org/10.1016/j.intimp.2021.108285.%0A

[7] D. YS, A. DL, and W. CH, "Determination of 10 carcinogenic polycyclic aromatic hydrocarbons in mainstream cigarette smoke," *J Agric Food Chem*, vol. 55, no. 15, pp. 5966–5973, 2007, doi: 10.1021/jf070649o.

[8] K. B. Kumar Sai, S. Mukherjee, and H. Parveen Sultana, "Low Cost IoT Based Air Quality Monitoring Setup Using Arduino and MQ Series Sensors with Dataset Analysis," *Procedia Comput. Sci.*, vol. 165, no. 2019, pp. 322–327, 2019, doi: 10.1016/j.procs.2020.01.043.

[9] L. Erlandsson *et al.*, "Exposure to wood smoke particles leads to inflammation, disrupted proliferation and damage to cellular structures in a human first trimester trophoblast cell line," *Environ. Pollut.*, vol. 264, pp. 1–10, 2020, doi: 10.1016/j.envpol.2020.114790.