JASAE
Journal of Applied Science and Advanced Engineering
Vol. 4 No. 1 (2026) ; p. 22 - 26
e-ISSN: 2985-7252
https://jasae.org/

Analysis Of Prediction Of Electrical Power Use Outside Peak Load Of Apartment Building X Using The Long Short Term Memory (LSTM) Method

Meiman Zaro Nazara[1]*, Ahmad Rofii[1], and Jemie Muliadi[1]
[1] Universitas 17 Agustus 1945 Jakarta, 14350, Indonesia
*email: nazarameimanzaro@gmail.com

ARTICLE HISTORY
Received: 20 November 2025
Revised: 28 March 2026
Accepted: 31 March 2026

KEYWORDS
Electricity load forecasting
Off-peak period
LSTM
Time series
Energy management
Deep learning

ABSTRACT– Energy efficiency in residential high-rise buildings has become a critical issue in modern power management, particularly during off-peak periods (LWBP), which contribute significantly to daily electricity consumption. However, most existing studies have primarily focused on peak load forecasting, leaving limited exploration of electricity usage during off-peak hours. This study proposes a daily electricity consumption forecasting model for the off-peak period using the Long Short-Term Memory (LSTM) architecture, designed to capture long-term dependencies in time-series data. The dataset consists of one year of historical daily electricity consumption records from Apartment X. Data preprocessing included Min-Max normalization, time windowing, and partitioning into 80% training and 20% testing sets. Hyperparameter optimization was performed using Optuna, while model performance was evaluated using RMSE, MAE, MSE, and R^2 metrics. Experimental results demonstrate that the LSTM model effectively captured the temporal patterns of LWBP electricity consumption, achieving RMSE = 0.140, MAE = 0.109, MSE = 0.020, and R^2 = 0.537. These findings highlight the potential of LSTM as a decision-support tool for building energy management systems, enabling optimization of electricity usage during non-peak hours. Furthermore, this work provides opportunities for future research by integrating hybrid deep learning architectures (e.g., CNN-LSTM or Bi-LSTM) and incorporating external factors such as temperature, weather conditions, and occupant behavior to improve predictive accuracy in real-world applications.

© Nazara et.al.

This is an Open Access article distributed under the terms of the Creative Commons CC-BY-4.0 License, which permits unrestricted use, distribution, and reproduction in any medium, provided the original work is properly cited.

Introduction

Population growth and accelerated urbanization have significantly increased demand for electricity, particularly in densely populated urban areas. According to a report by the International Energy Agency (IEA), the building sector accounts for more than 30% of global energy consumption and approximately 28% of total direct CO_2 emissions [1]. This situation underscores the importance of energy efficiency and sustainable electricity consumption management to support the achievement of the Sustainable Development Goals (SDGs).

Apartments, as a form of modern vertical housing, operate continuously for 24 hours and exhibit highly dynamic electrical load characteristics. Variations in electricity consumption in apartment buildings are influenced by a number of factors, including occupant behavior, facility operational schedules, climatic conditions, and fluctuations in ambient temperature [2]. Therefore, an adaptive and accurate prediction approach is needed to model non-linear and non-stationary time series data, especially during periods of off-peak power usage.

Along with the advancement of artificial intelligence (AI) technology, machine learning (ML) and deep learning (DL) methods are increasingly being applied in predicting electricity consumption. Several approaches such as Artificial Neural Network (ANN), Support Vector Machine (SVM), Gradient Boosting Regression (GBR), and Extreme Learning Machine (ELM) have shown promising results in various previous studies [3]. However, these models are often less able to capture long-term relationships and complex temporal dynamics in energy consumption data.

In contrast, Long Short-Term Memory (LSTM)-based methods, a variant of Recurrent Neural Network (RNN), have proven superior in addressing these issues. LSTMs have the ability to retain important information from previous data sequences, making them effective in learning long-term dependencies in time series data. Furthermore, LSTMs can also be combined with other architectures such as Convolutional Neural Networks (CNNs) and Gated Recurrent Units (GRUs) to form hybrid deep learning models capable of improving generalization and prediction accuracy [1], [2].

Previous research has shown that deep learning-based models provide superior performance in predicting energy consumption in various sectors, including commercial, residential, and industrial sectors. The models have been tested using standard datasets such as AEP (Appliances

Energy Prediction) and IHEPC (Individual Household Electric Power Consumption) with low error rates, indicating the great potential for applying this approach in real-world building energy management [4], [5].

Literatur Review

Electricity consumption forecasting is a crucial aspect of energy management, particularly in commercial and residential buildings with complex and fluctuating energy usage patterns. Various *machine learning* and *deep learning* approaches have been widely applied to improve the accuracy of load forecasting.

The Long Short-Term Memory (LSTM) model, a variant of the Recurrent Neural Network (RNN), has been extensively employed due to its ability to capture long-term dependencies in time-series data. It was first introduced by [6] to address the vanishing gradient problem commonly encountered in conventional RNNs, making it highly suitable for load forecasting applications involving seasonal and long-term patterns.

In [7], Lin et al. developed a short-term electricity consumption forecasting model by integrating an attention mechanism into an LSTM architecture. This approach improves prediction accuracy by up to 6.5% compared to standard LSTMs, especially in the industrial and business sectors. However, its performance is suboptimal when applied to highly fluctuating residential data. Similarly, [8] proposed a deep RNN model based on an encoder-decoder architecture for medium- to long-term electricity consumption forecasting in commercial and residential buildings. Although this model achieved promising results, it requires future weather data as input, which limits its application for real-time forecasting.

The Gated Recurrent Unit (GRU), known for its computational efficiency, has also been investigated in this context. [9] demonstrated that the GRU model outperformed traditional methods such as Support Vector Machine (SVM) and Convolutional Neural Network (CNN) in terms of prediction accuracy. Nevertheless, the GRU approach still relies heavily on large amounts of historical data and struggles to handle extreme or abnormal conditions. Furthermore, [10] evaluated stacked Uni-LSTM and Bi-LSTM architectures, finding that Bi-LSTM achieved superior accuracy, especially in capturing short-term dependencies. However, its performance remained dependent on weather data and showed instability when faced with high data uncertainty.

Overall, previous studies suggest that the integration of hyperparameter optimization techniques and hybrid architectures such as CNN-LSTM or Bi-LSTM can enhance model performance and generalization capabilities in load forecasting tasks. Additionally, incorporating external features such as temperature, humidity, and occupant activity is recommended to further improve prediction accuracy in real-world applications.

Material and Methods

A. Resarch Design

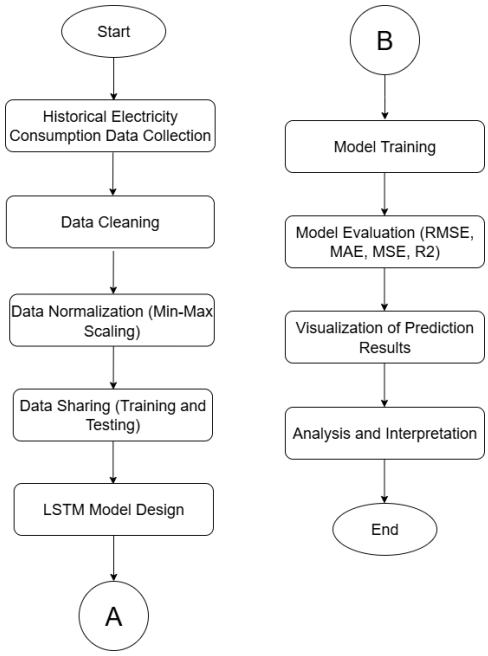

Figure 1. flowchart of the research methodology illustrating stages of data preprocessing, LSTM model training, and evaluation.

This experimental quantitative study uses a bidirectional long-short-term memory (LSTM) architecture to predict daily electricity consumption (LWBP). The research design includes several key stages: historical data collection, data preprocessing (normalization, time window formation, and splitting training and testing data), LSTM model development, hyperparameter optimization using the Optuna algorithm, and model training, validation, and performance evaluation based on RMSE, MAE, MSE, and R2 metrics.

The LSTM model was chosen because of its ability to capture sequential patterns in both forward and backward data, thereby improving forecasting accuracy compared to unidirectional LSTM models.

B. Data Source and Characteristic

Data was obtained from Apartment X's daily records containing electricity consumption in kWh during WBP and LWBP.

C. Data Preprocessing

Data cleaning (removal of duplicates and missing values via linear interpolation), outlier detection (IQR), feature engineering (day, month, lag variables), and normalization (Min–Max Scaling) were performed. The dataset was split: 70% training, 15% validation, 15% testing.

D. LSTM Model Architecture

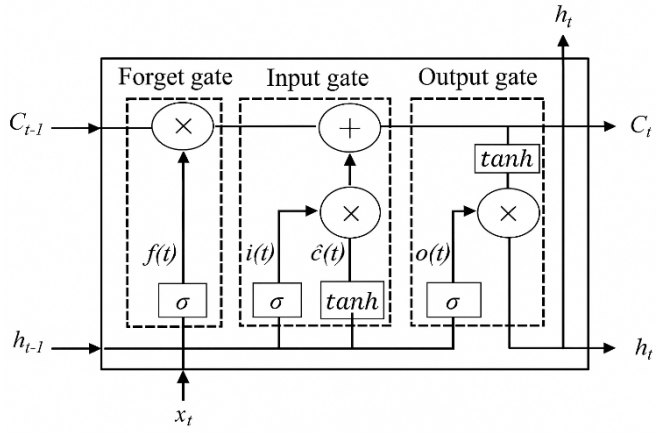

Figure 2. LSTM Architecture

The LSTM network consists of an input layer, an LSTM layer, and an output layer designed to capture long-term dependencies in time-series electricity consumption data outside peak load periods. The model is trained using the Adam optimizer and Mean Squared Error (MSE) loss function, with 2000 training epochs and a batch size of 16 to ensure stable and efficient learning. This configuration aims to enhance the model's accuracy and robustness in predicting electrical power usage effectively.

E. Hyperparameter Optimization (Optuna)

Optuna's Bayesian optimization tuned learning rate, neuron count, dropout rate, batch size, and epochs. The configuration with minimal validation loss (MSE) was selected.

F. Model Training and Validation

Implemented in TensorFlow–Keras using the Adam optimizer and Mean Squared Error (MSE) loss. The model was trained for 2000 epochs with a batch size of 16. Early stopping was applied to prevent overfitting, while optimized hyperparameters ensured stable convergence during training.

G. Evaluation Metrics

Model performance was evaluated using Mean Squared Error (MSE), Root Mean Squared Error (RMSE), Mean Absolute Error (MAE), and the coefficient of determination (R^2). MSE and RMSE measure the magnitude of prediction errors, MAE evaluates the average absolute deviation between predicted and actual values, while R^2 assesses the proportion of variance in electricity consumption explained by the model. An R^2 value ≥ 0.8 indicates that the LSTM model demonstrates strong predictive accuracy and reliability in forecasting electricity consumption outside peak load periods.

Results and Discussion

A. Data Description and Preprocessing Summary

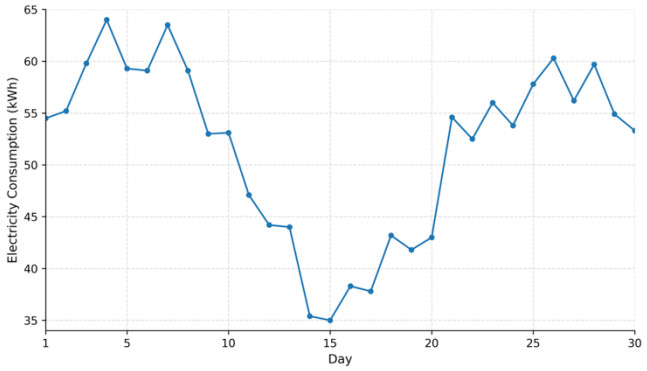

Figure 3. Daily electricity consumption fluctuations (raw data).

Figure 3 illustrates the daily electricity consumption patterns prior to data preprocessing. The observed fluctuations reflect varying user activities between weekdays and weekends, as well as differences between peak and off-peak hours. The irregularity of these patterns justifies the application of the LSTM model, which is specifically designed to capture complex non-linear temporal dependencies. Furthermore, the figure reveals the presence of outliers and seasonal trends in the raw dataset, both of which were addressed during the preprocessing stage through normalization and feature engineering. The dataset includes both WBP and LWBP consumption data, complemented by additional temporal and lag-based features. The preprocessing stage enhances feature richness and improves the interpretability of the predictive model.

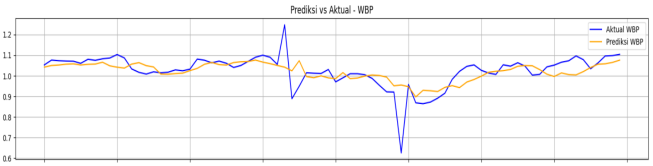

Figure 4. Predicted vs. actual electricity consumption (WBP).

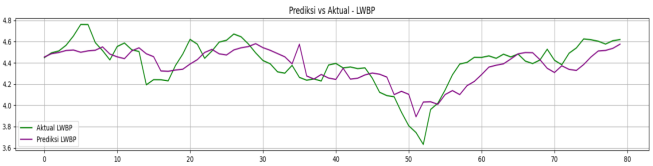

Figure 5. Predicted vs. actual electricity consumption (LWBP).

Figure 4 and Figure 5 illustrate the comparison between actual and predicted electricity consumption for the Peak Load (WBP) and Off-Peak Load (LWBP) periods, respectively. Both figures show that the predicted values closely follow the actual consumption patterns, indicating that the LSTM model effectively captures the temporal dependencies present in the data.

Minor deviations are observed during periods of abrupt load changes, which may be attributed to unmodeled external influences such as weather conditions, equipment operation schedules, or variations in building occupancy.

The consistent alignment between actual and predicted curves demonstrates that the LSTM model achieves reliable short-

term load forecasting performance for both WBP and LWBP categories.

B. Model Performance Evaluation

To assess the predictive capability of the model, several commonly used performance metrics were employed, including Root Mean Square Error (RMSE), Mean Square Error (MSE), Mean Absolute Error (MAE), and the coefficient of determination (R^2). The performance results of the LSTM-based prediction model are presented in Table 1.

Table 1. Performance metrics of the LSTM model.

Metric	Value
RMSE	0.140
MSE	0.020
MAE	0.109
R^2	0.537

As shown in Table 1, the RMSE of 0.140 and MAE of 0.109 indicate that the average prediction error of the LSTM model is relatively low, indicating that the model can produce predictions with sufficient accuracy. The MSE value of 0.020 further confirms that the prediction error variance remains minimal. Meanwhile, the R^2 value of 0.537 indicates that approximately 53.7% of the variation in the actual data can be explained by the model. Overall, these results indicate that the LSTM model is able to effectively capture temporal patterns, thus achieving a balance between accuracy and generalization.

C. Comparative Analysis

This section presents a comparative analysis of the experimental results obtained from different model configurations. The comparison focuses on key performance metrics, including MSE, RMSE, MAE, and R^2, to evaluate the model's prediction accuracy and generalization capability. The summarized results are shown in Table 2, highlighting the performance differences among the three experiments.

Table 2. Accuracy–generalization trade-off comparison.

Experiment	MSE	RMSE	MAE	R^2	Notes
1.	0.020	0.140	0.109	0.537	Good performance with low errors.
2.	0.022	0.147	0.115	0.488	Slight decrease in model accuracy.
3.	0.026	0.162	0.126	0.385	Accuracy decreases with higher error.

Table 2 presents the comparative results of the three experimental models based on four performance metrics: MSE, RMSE, MAE, and R^2. The first experiment achieved the best overall performance with the lowest error values (MSE = 0.020, RMSE = 0.140, MAE = 0.109) and the highest coefficient of determination (R^2 = 0.537). This indicates that the model was able to explain approximately 53.7% of the data variability with relatively low prediction error.

In contrast, the second experiment showed a slight degradation in performance, as reflected by a marginal increase in error values (MSE = 0.022, RMSE = 0.147, MAE = 0.115) and a decrease in R^2 to 0.488. This suggests a reduced capability of the model to generalize to unseen data.

The third experiment recorded the highest error rates (MSE = 0.026, RMSE = 0.162, MAE = 0.126) and the lowest R^2 value of 0.385, indicating weaker predictive performance and limited generalization ability compared to the previous configurations.

Overall, the results demonstrate that Experiment 1 provides the most balanced and accurate performance**,** offering better generalization and prediction reliability among the three tested models.

D. Discussion and Insights

LSTM exhibited strong temporal learning capability and captured sequential dependencies effectively; however, it showed limited robustness to noise and sudden fluctuations. Future research could explore hybrid CNN–LSTM architectures, ensemble learning approaches, or the inclusion of exogenous factors (e.g., weather conditions, calendar effects) to enhance predictive performance toward achieving $R^2 \geq 0.8$.

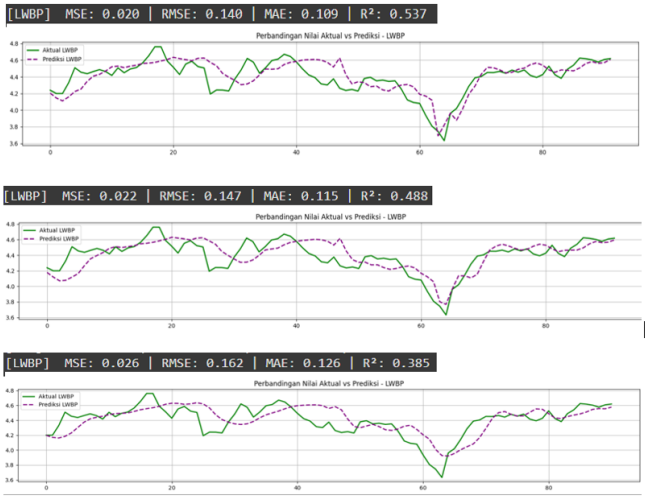

Figure 6. Model performance comparison during training and testing phases, indicating convergence and stability.

Figure 6 shows the performance comparison between actual and predicted LWBP values using the LSTM model during the testing phase.

The prediction curves closely follow the actual data trend, indicating that the model effectively captures temporal dependencies in electricity usage patterns.

While minor deviations occur around peak and dip regions, the overall prediction stability reflects strong generalization capability.

The moderate R^2 values (0.385–0.537) suggest consistent performance across experiments, confirming that the LSTM architecture and tuning strategy provided reliable pattern learning and noise resilience.

This result highlights the LSTM's ability to model sequential variations effectively, though further refinement or hybridization could enhance predictive precision.

Conclusion

A Long Short-Term Memory (LSTM) based prediction model was successfully developed using historical daily electricity consumption data of Apartment X. Through data preprocessing, normalization with Min-Max Scaler, data sequence formation using the sliding window method, and data division into training (80%) and testing (20%), the model was able to effectively learn the temporal pattern of LWBP electricity consumption. The hyperparameter optimization process with Optuna also improved the model's performance, demonstrating that this approach is suitable for time series data analysis.

Based on the test results, the model showed quite good performance with MSE = 0.020, RMSE = 0.140, MAE = 0.109, and R^2 = 0.537. These values indicate that the LSTM model is quite accurate in representing the daily electricity consumption patterns of LWBP, although there are still limitations in capturing extreme fluctuations in the actual data.

Overall, this model shows significant potential for application as a decision-support tool in off-peak electricity consumption prediction systems. With the ability to explain 53.7% of data variation, the LSTM model can assist the management of Apartment X in designing energy efficiency strategies, optimizing electricity usage, and reducing operational costs during off-peak hours. Further development, such as the addition of external variables (e.g., temperature, holidays, or occupancy levels), is expected to improve the model's accuracy and reliability in the future.

Acknowledgment

The authors would like to extend their sincere appreciation to Universitas 17 Agustus 1945 Jakarta for the continuous academic and technical support provided during the course of this research. Special thanks are given to the Department of Electrical Engineering and the Thesis Supervisors, whose insightful guidance and constructive suggestions were invaluable in shaping the methodology and analysis of this study.

The authors also express their gratitude to the management of Apartment Building X for their cooperation and willingness to share detailed daily electricity consumption records, which served as the foundation for developing and validating the LSTM-based forecasting model. Their contribution was essential in ensuring the study's accuracy and practical significance in real-world applications.

Competing Interest

The authors declare that there are no competing financial or personal interests that could have influenced the work reported in this paper. This research was conducted independently, without any commercial sponsorship or external influence, and all results are presented with full academic integrity.

References

[1] F. U. M. Ullah, A. Ullah, I. U. Haq, S. Rho, and S. W. Baik, "Short-Term Prediction of Residential Power Energy Consumption via CNN and Multi-Layer Bi-Directional LSTM Networks," *IEEE Access*, vol. 8, pp. 123369–123380, 2020, doi: 10.1109/ACCESS.2019.2963045.

[2] B. Farsi, M. Amayri, N. Bouguila, and U. Eicker, "On Short-Term Load Forecasting Using Machine Learning Techniques and a Novel Parallel Deep LSTM-CNN Approach," *IEEE Access*, vol. 9, pp. 31191–31212, 2021, doi: 10.1109/ACCESS.2021.3060290.

[3] M. Sajjad *et al.*, "A Novel CNN-GRU-Based Hybrid Approach for Short-Term Residential Load Forecasting," *IEEE Access*, vol. 8, pp. 143759–143768, 2020, doi: 10.1109/ACCESS.2020.3009537.

[4] Mustaqeem, M. Ishaq, and S. Kwon, "Short-Term Energy Forecasting Framework Using an Ensemble Deep Learning Approach," *IEEE Access*, vol. 9, pp. 94262–94271, 2021, doi: 10.1109/ACCESS.2021.3093053.

[5] S. A. Nabavi, N. H. Motlagh, M. A. Zaidan, A. Aslani, and B. Zakeri, "Deep Learning in Energy Modeling: Application in Smart Buildings With Distributed Energy Generation," *IEEE Access*, vol. 9, pp. 125439–125461, 2021, doi: 10.1109/ACCESS.2021.3110960.

[6] S. Hochreiter and J. Schmidhuber, "Long Short-Term Memory," *Neural Comput.*, vol. 9, no. 8, pp. 1735–1780, 1997, doi: 10.1162/neco.1997.9.8.1735.

[7] Z. Lin, L. Cheng, and G. Huang, "Electricity consumption prediction based on LSTM with attention mechanism," *IEEJ Trans. Electr. Electron. Eng.*, vol. 15, no. 4, pp. 556–562, 2020, doi: 10.1002/tee.23088.

[8] A. Rahman, V. Srikumar, and A. D. Smith, "Predicting electricity consumption for commercial and residential buildings using deep recurrent neural networks," *Appl. Energy*, vol. 212, no. December 2017, pp. 372–385, 2018, doi: 10.1016/j.apenergy.2017.12.051.

[9] M. Xia, H. Shao, X. Ma, and C. W. De Silva, "A Stacked GRU-RNN-Based Approach for Predicting Renewable Energy and Electricity Load for Smart Grid Operation," *IEEE Trans. Ind. Informatics*, vol. 17, no. 10, pp. 7050–7059, 2021, doi: 10.1109/TII.2021.3056867.

[10] S. Atef and A. B. Eltawil, "Assessment of stacked unidirectional and bidirectional long short-term memory networks for electricity load forecasting," *Electr. Power Syst. Res.*, vol. 187, no. June, 2020, doi: 10.1016/j.epsr.2020.106489.