JASAE
Journal of Applied Science and Advanced Engineering
Vol. 4 No. 2 (2026) ; p. 47 - 51
e-ISSN: 2985-7252
https://jasae.org/

Mechanical Control System Design for Mass-Based Sorting of Oil Palm Fresh Fruit Bunches

Dodi Sofyan Arief[1], M. Dalil[1], Fadhil Fajr[1], Minarni Shiddiq[2], Vicky Vernando Dasta[2], Abdul Khair Junaidi[3*]
[1] Department of Mechanical Engineering, Faculty of Engineering, Universitas Riau
[2] Department of Physics, Faculty of Mathematics and Natural Sciences, Universitas Riau
[3] Department of Mechanical Engineering, Sekolah Tinggi Teknologi Pekanbaru
*email: abdulkhairjunaidi@gmail.com

ARTICLE HISTORY
Received: 23 August 2026
Revised: 7 September 2026
Accepted: 8 September 2026

KEYWORDS
Palm Oil
Smart
Machine
Tool
Circuit

ABSTRACT– Fresh fruit bunch sorting process palm oil (FFB) in palm oil mills still uses manual methods and relies on harvesters or graders, therefore a smart machine vision tool was created based on multispectral imaging for sorting and grading oil palm fresh fruit bunches. This tool functions as a sorting tool for fresh oil palm fruit bunches. This tool is designed for a sorting system based on mass ≤ 5kg as well as mechanisms and working systems of mechanical controls on sorting tools. Oil palm fresh fruit bunches are weighed using the load cell in the sorter, and then the results of the FFB weight reading on the load cell will be aligned using other digital scales that have been calibrated using the linear regression method. Regression equation results from 15 FFB samples were obtained, yielding an increased coefficient of determination (R^2) of 0.99. Therefore, a schematic design of the microcontroller control system will be obtained as well as the mechanism and working system of mechanical control on the palm fruit sorting tool based on mass.

.

© Junaidi et al.

This is an Open Access article distributed under the terms of the Creative Commons CC-BY-4.0 License, which permits unrestricted use, distribution, and reproduction in any medium, provided the original work is properly cited.

Introduction

The process of sorting palm oil fresh fruit bunches is the sorting or grading process in processing palm oil fresh fruit bunches into CPO (Crude Palm Oil). Most grading procedures are being carried out manually to reorder palm fresh fruit bunches. When applied to large-scale industries, this method is likely to be ineffective [1].

Therefore, sorting quickly and accurately can save time in the sorting process. This technology has been created by the Riau University team. This technology is called machine vision, which is sorting equipment using combinations of sensors, detectors, and conveyor motors [2]. In this study, the development of this sorting tool by combining detection tools weight using a load cell sensor and the use of a pneumatic lever as an actuator which functions as a palm fruit separator. Grading is thought to be the key stage in ensuring that fruit meets high standards of quality. Consumers place a high value on fruit quality, thus providers are required to meet this demand by giving their clients fruits of the highest caliber. For the purpose of evaluating the fruit's quality, a lot of time is lost on the fields. In general, the quality of the fruits depends on their outward characteristics, such as size, color intensity, shape, and surface appearance, as well as their inner characteristics, such as their sugar and acid contents [3],[4]. However, color and size are the most crucial characteristics for classifying and grading fruits.

Automation is now a key factor in increasing the flexibility and efficiency of industrial operations. Industrial automation is the process of handling different processes and machines in an industry without a human person by using control systems, such as computers or robots, and information technology. It comes after mechanization as the next stage of industrialization [5]**.** However, existing FFB sorting systems often rely solely on optical features, lacking integrated automated mass evaluation and mechanical segregation. To address this limitation, this study contributes a mass-based sorting system that seamlessly combines load-cell weight measurements with a pneumatic lever actuator for real-time fruit separation.

Material and Methods

A. Microcontroller

A microcontroller is a device that integrates a number of components of a microprocessor system into a single microchip [6]. There are three main components of a microcontroller, namely: CPU processor, memory and input/output (I/O) which are equipped with such Timer Module, Serial Port, and ADC Module.

In this research, A microcontroller board called Arduino Uno is based on the Atmega328 data sheet used in this application. The reason this controller board is the most widely used open source is that it is made to make electronic control easier in all situations. I.C. (integrated circuit) has 14 digital inputs/outputs (6 outputs for PWM), 6 analog inputs, 16 MHz ceramic crystal resonator, USB connection, adapter socket, pins ICSP header, and reset button.

B. Pneumatic Cylinder

A pneumatic cylinder is an actuator or mechanical device that uses the power of compressed air to produce force in the linear reciprocating movement of the piston. In operation, the cylinder is pneumatically controlled by a valve or control valve. This control valve works to control the direction of air that will enter the cylinder tube. This directional control valve is usually controlled mechanically or manually by hand, or electrically such as a Solenoid valve [7].

C. Solenoid Valve

Solenoid valve is a valve that is driven by electrical energy through solenoid and has a coil as a driver which functions to move the piston which can be moved by AC or DC current, solenoid Pneumatic valves or solenoid valves have input holes and output hole. The input hole functions as a terminal or air outlet pressurized inlet or supply (service unit). The function of the solenoid valve is to turn off, release, dose, distribute, or mix fluids. There are many types and types of Solenoid Valves depending on the type and type usage, but based on the model the solenoid valve can be differentiated into two parts, namely single coil solenoid valve and double solenoid valve coils, both have the same way of working [8].

D. Sensor

A sensor is an electronic component that can detect physical and chemical environmental changes. The sensor system functions by turning signals into code by detecting changes, whether they be chemical or physical. The transducer will later convert the outcomes of these modifications into an electrical quantity [9].

E. Load Cell

load cell is a digital scale sensor that works automatically, and mechanically consisting of a conductor, strain gauge, and Wheatstone bridge. Load. The cell uses a working principle that utilizes a strain gauge as a sensing. The strain gauge is a passive transducer that changes something mechanical shift becomes a change in pressure. These changes are then measured with a Wheatstone bridge where the output voltage is used as a reference to the load received by the load cell [10].

Load cell sensors are designed to detect the pressure or weight of a load, load cell sensors are generally used as the main component of a digital weighing system and can be applied to bridge scales which function to weigh the weight of transport trucks raw materials, measurements carried out by the Load Cell use the principle of pressure.

F. Power Supply

A power supply is a useful electronic device for devices other devices, especially electric power. AC power supply works changes the DC voltage to become smaller with the help of a transformer. This voltage is then transmitted with a voltage circuit rectifier, and at the end, a condenser is added as the final voltage DC voltage.

G. Amplifier HX711

HX711 is a weighing module that has a strengthening working principle of changes in voltage measured on the load cell sensor and converting them to electrical quantities through the existing circuit. HX711 precision 24-bit analog-to-digital converter (ADC) designed for digital weighing sensors scales and industrial control applications connected to bridge sensors. The module communicates with the computer/microcontroller via TTL [11].

H. Calibration system

Calibration, in general, is the process of modifying a device's output or indication measures to be consistent with the quantities of the standards used with a particular level of precision. An action called calibration is done to ascertain Conventional truth is the value of a measurement standard set by national and international standards for an instrument. Also skewed is calibration. This is accomplished by comparing a standard to related national and international standards, using approved reference materials, and adhering to ISO/IEC 17025:2005's guidelines.

I. Research Scheme

The research was carried out by building a sorting system using a load cell sensor as a mass reader on Fresh Fruit Bunches and lever pneumatic which will later function as the executor of the Fresh Fruit Bunches that will be sorted. Fresh Fruit Bunches to be sorted will then move using a conveyor towards sorting area, in the sorting area Fresh Fruit Bunches will pass through the load cell for measurement mass of fresh fruit bunches, the mass of fresh fruit bunches to be sorted is ≤ 5kg, after measuring mass is carried out, the Fresh Fruit Bunches will move via the pneumatic lever, If the mass of the FFB is strictly less than 5 kg (<5 kg), the pneumatic lever automatically actuates to push the fruit into the designated bin; otherwise, for bunches weighing 5 kg or greater (5 kg), the FFB remains on the conveyor and moves gradually to the next sorting stage (Figure 1.).

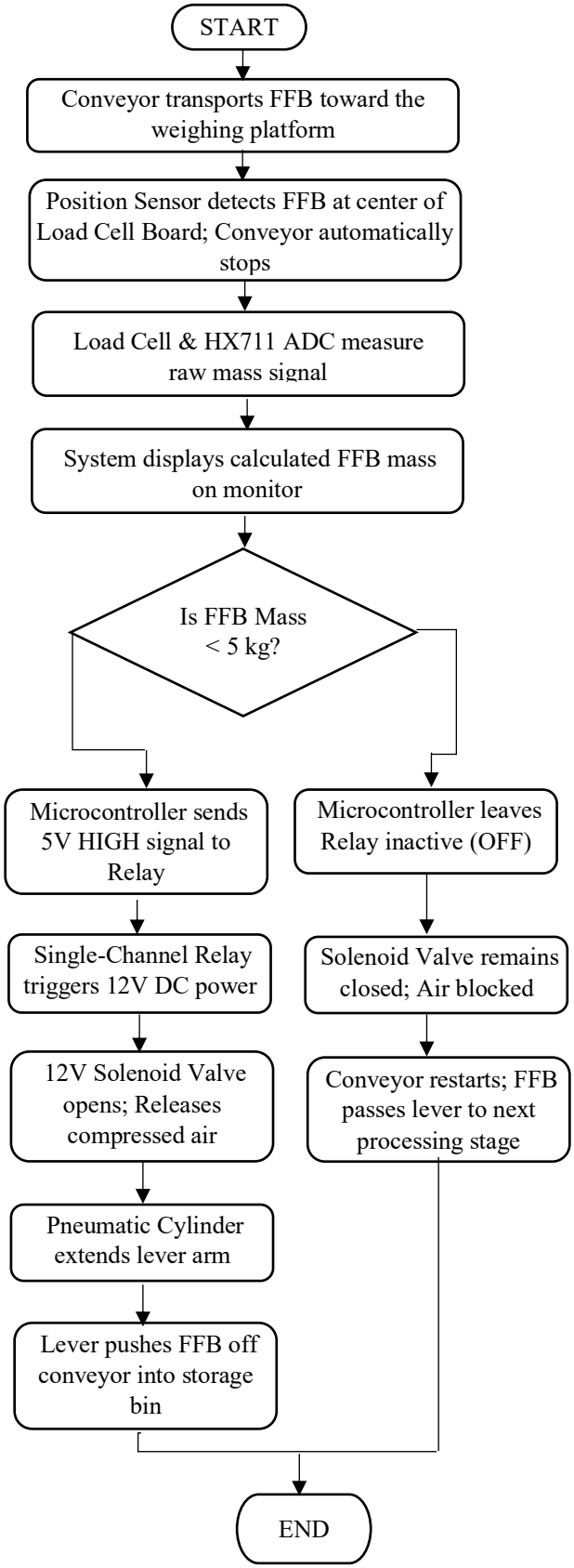

Figure 1. Algorithm's overall flow

Results and Discussion

A. Mass Sorting System

The acquisition stage is the stage carried out to carry out the control system that drives the mechanical system in the fruit sorting process palm oil heads are based on mass with load cells and have been harmonized with calibrated reference scales. Program development is carried out to run the entire system automatically and integrate with each other. In general, the program is developed based on several main components sorting system consisting of load cell, serial connector, HX711, ESP8266, and power supply units. As seen in Figure 1, fresh palm fruit bunches will move using a conveyor to the weighing area. The conveyor will automatically stop if the palm fruit bunches are fresh. is in the middle of the load cell board for weighing (1).

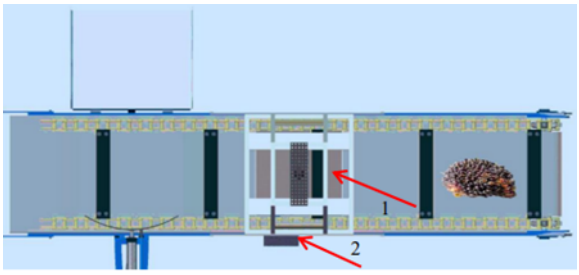

Figure 2. Sorting Process which consists of (1) Load Cell Board (2) Display load Cell.

Furthermore, when the position of fresh palm fruit bunches (FFB) is already is in the middle of the load cell board, the mass of the FFB will be read and displayed on the load cell display or monitor.

The mass data that has been obtained will determine the feasibility of the fresh fruit bunches of oil palm, whether they meet the requirements or otherwise. If the data on the mass of fresh oil palm fruit bunches obtained is ≤ 5kg, then the oil palm fresh fruit bunches are declared not to meet the specified mass standards, otherwise if the mass of oil palm fresh fruit bunches (FFB) ≥ 5kg, then the palm fruit meets the minimum mass standard requirements, namely 5kg.

B. Pneumatic Control System

This control system is a continuation of the data that has been processed by the load cell. The pneumatic lever itself is an actuator that works after receiving the results of decisions made by the program regarding mass sorting of oil palm fruit. If the mass of the fresh fruit bunches (FFB) is less than 5 kg (<5 kg), the pneumatic lever pushes the fruit into the storage box. Conversely, if the mass is 5 kg or greater (≥5 kg), the FFB moves directly to the next sorting stage, then palm fruit passes sorting and is declared to meet the mass standard requirements in the sorting system. The pneumatic lever is connected to the solenoid valve which regulates and sends compressed air produced by a compressor machine so that the pressurized air moves or pushes a pneumatic lever to sort

fresh palm oil fruit bunches. Figure 3 shows the mechanical control system on the oil palm fresh fruit bunch sorting tool, namely in the form of a pneumatic lever control or command to be able to push or sort fresh fruit bunches from palm oil.

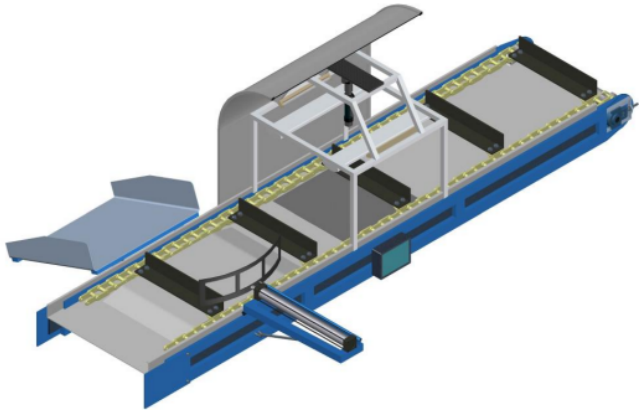

Figure 3. 3D Design of sorting equipment

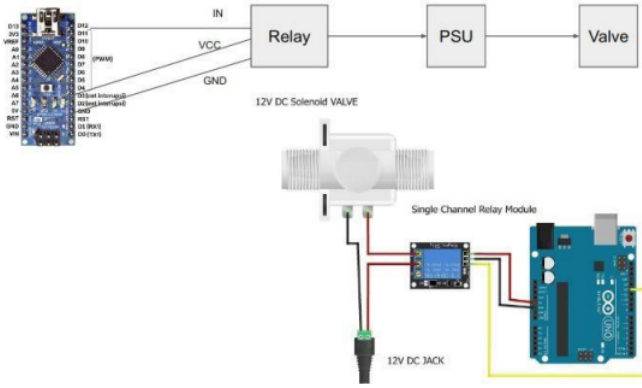

Figure 4. Microcontroller circuit

As shown in Figure 4, the Arduino circuit has been installed and programmed so that when the Arduino receives mass data from the load cell then Arduino will send a signal to the solenoid valve, and then the solenoid. The valve is responsible for regulating the air pressure given to the cylinder pneumatic, when the mass data obtained is ≤ 5kg then the cylinder pneumatic will push fresh palm fruit bunches (FFB).

C. Load Cell Calibration Results

To calculate the percentage error relative to the reference standard, use the standard relative error formula

$$Error\ \% = \left(\frac{Calibration\ Measurement - Load\ Cell\ Measurement}{Calibration\ Measurement}\right) \times 100 \quad (1)$$

If calculated as the raw absolute residual error,

$$Residual = (Calibration - Load\ Cell) \quad (2)$$

Tabel 1. Load Cell Calibration Result Data

Sample	Load Cell Measurement (Kg)	Calibration Measurement (Kg)	Residual (%)
FFB 1	0.3	0.33	3
FFB 2	0.44	0.47	3
FFB 3	0.48	0.5	2.9
FFB 4	0.52	0.55	2.10
FFB 5	0.58	0.61	2.11
FFB 6	0.6	0.63	2.12
FFB 7	0.64	0.67	2.13
FFB 8	0.72	0.75	2.14
FFB 9	0.76	0.79	2.15
FFB 10	0.86	0.89	2.16
FFB 11	0.94	0.97	2.17
FFB 12	1	1.02	2.18

Comparison results between FFB weight measurements using the load cells and scales that have been calibrated are shown in Table 1. The distribution of data on FFB weight was chosen from the smallest 0.3 kg to 1 kg. error from load cell measurements on calibration scale measurements ranging from 0-3%, which means the level load cell accuracy is very good. This data collection aims to find patterns or relationships between FFB weight measurements by load cells and calibrated digital scales.

D. Regression equation results

Results of the regression equation from 12 FFB samples that have been carried out to get the value of the coefficient of determination R^2 of 0.99 which demonstrating strong agreement between the designed model and actual measurements. To further quantify measurement accuracy, the calibration yielded a Mean Absolute Error (MAE) of 0.045 kg. The closer the number is to 1, the better the model or pattern that has been designed.

Based on the processed calibration data, the relationship between the reference mass and the load cell reading was determined using linear regression:

$$Y(x) = 0.9985x + 0.0307$$

where x is the reference mass (kg) and Y(x) is the load cell reading (kg). The slope of 0.9985, which is close to unity, indicates that the load cell exhibits near-ideal sensitivity over the tested measurement range. The intercept of 0.0307 kg (30.70 g) represents the zero-offset error of the measurement system. These results indicate good agreement between the load cell output and the reference mass, although zero-offset compensation is required to improve measurement accuracy.

Conclusion

A mechanical and control system was developed for sorting Fresh Fruit Bunches (FFB) of palm oil automatically

using an Arduino Uno microcontroller, a load cell sensor, and a pneumatic lever cylinder driven by a 12V DC solenoid valve. Fresh fruit bunches are weighed on a conveyor platform. Comparison between the load cell readings and calibrated reference scale measurements demonstrated high accuracy, with measurement error margins kept within 0–3%. A linear regression calibration model yielded the equation $Y(x) = 0.9985x + 0.0307$ kg with a high coefficient of determination ($R^2 = 0.99$) confirming strong measurement reliability for automated sorting operations. From an engineering perspective, a maximum measurement error of 3% represents an absolute uncertainty of approximately ±0.15 kg at the critical 5 kg decision threshold, which provides sufficient precision for reliable binary mass classification. Future research should focus on validating system accuracy specifically near the 5 kg boundary region and evaluating stability during continuous multi-cycle operation.

Author Contributions

D.S.A.: Supervision, Project administration, Writing - review & editing. M.D.: Conceptualization, Methodology, Investigation, Formal analysis, Visualization, Supervision. M.S.: Conceptualization, Methodology, Investigation, Visualization, Software, Validation. F.F.: Methodology, Investigation, Resources, Validation. V.V.D.: Investigation, Validation. A.K.J.: Writing - original draft, Writing - review & editing. All authors reviewed and approved the final version of the manuscript.

Competing Interest

The authors(s) declare no competing interest.

References

[1] I. O. Harmailil, "Sistem optik pencitraan multispektral berbasis LED dan metode deteksi objek YOLO untuk klasifikasi kematangan tandan buah segar kelapa sawit," Undergraduate thesis, Dept. Phys., Faculty of Mathematics and Natural Sciences, Universitas Riau, Pekanbaru, Indonesia, 2023.

[2] H. Mohammad, S. Kishore, and J. Prasetyo, "Developing an object detection and gripping mechanism algorithm using machine learning," *Journal of Applied Science and Advanced Engineering*, vol. 1, no. 2, pp. 47–54, Sep. 2023, doi: 10.59097/jasae.v1i2.

[3] A. Bhargava and A. Bansal, "Fruits and vegetables quality evaluation using computer vision: A review," *Journal of King Saud University-Computer and Information Sciences*, 2018.

[4] Imnadir, A. K. Junaidi, and M. Dalil, "Control of Automatic Beverage Bottle Filling Process Using P and Team Viewer IoT." *Journal of Ocean, Mechanical and Aerospace-science and engineering*-, vol. 66, no. 2, pp. 69-76, Jul. 2022, doi://doi.org/10.36842/jomase.v66i2.309.

[5] L. Fernandes and B.R Shivakumar, "Identification and Sorting of Object based on Shape and Colour using robotic Arm", in *Proc. 4th Int. Conf. Inventive Systems Control (ICISC)*, 2020, pp. 866-871, 2020, doi: 10.1109/ICISC47916.2020.9171196.

[6] D. S. Arief, E. Fitra, Minarni, Herman, and R. Salambue, "Modeling of Control System on Sorting Palm Fruit Machine by Using Arduino Microcontroller", *Journal of Ocean, Mechanical and Aerospace-science and engineering*-, vol. 52, no. 1, pp. 1–5, 2018, doi: 10.36842/jomase.v52i1.44.

[7] A. L. Khakim and S. Purbawanto, "Rancang bangun alat timbang digital berbasis AVR tipe ATmega 32", *Jurnal Teknik Elektro*, vol. 7, no. 2, pp. 71–75, 2015, doi: 10.15294/jte.v7i2.8591.

[8] Wahyudi, A. Rahman, and M. Nawawi, "Perbandingan nilai ukur sensor load cell pada alat penyortir buah otomatis terhadap timbangan manual," *ELKOMIKA: Jurnal Teknik Energi Elektrik, Teknik Telekomunikasi, & Teknik Elektronika*, vol. 5, no. 2, pp. 207–220, 2017, doi: 10.26760/elkomika.v5i2.207.

[9] A. N. Rashid, N. M. Yahya, and A. Senawi, "Investigation of the automatic sorting machine based on PLC-pneumatic system," *Journal of Physics: Conference Series*, vol. 2933, no. 1, Art. no. 012025, 2025, doi: 10.1088/1742-6596/2933/1/012025.

[10] A. Prasad, M. Gowtham, S. Mohanraman, and M. Suresh, "Automatic sorting machine," *International Research Journal of Multidisciplinary Technovation*, vol. 2, no. 1, pp. 7–12, 2020, doi: 10.34256/irjmt2102.

[11] L. Xiong, T. Zhang, A. Yuan, and Z. Zhang, "Research on filtering algorithm of vehicle dynamic weighing signal," *World Electric Vehicle Journal*, vol. 15, no. 6, Art. no. 254, 2024, doi: 10.3390/wevj15060254.